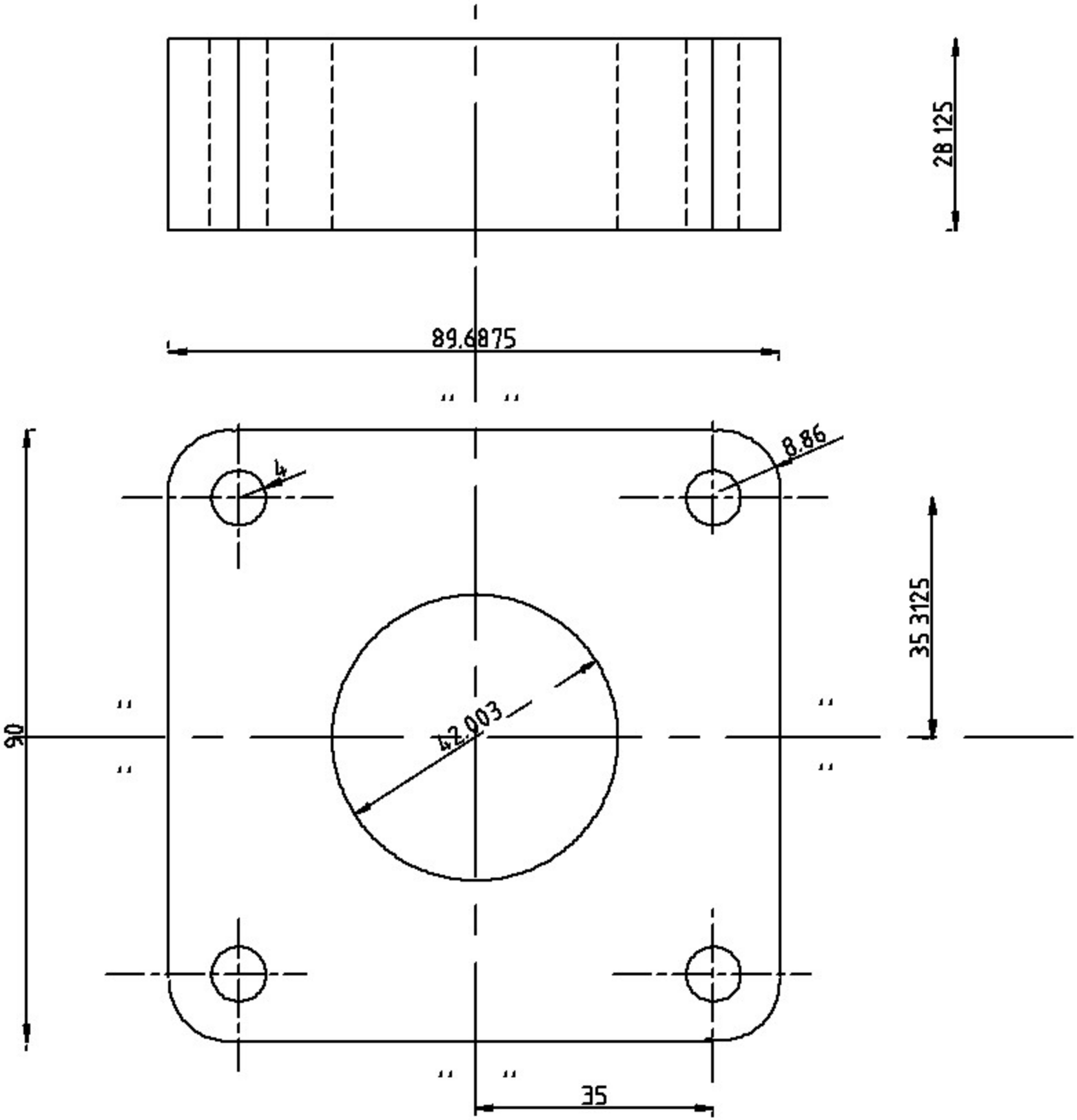
28 125
89.6875
8.86
4
35 3125
42.003
90
35