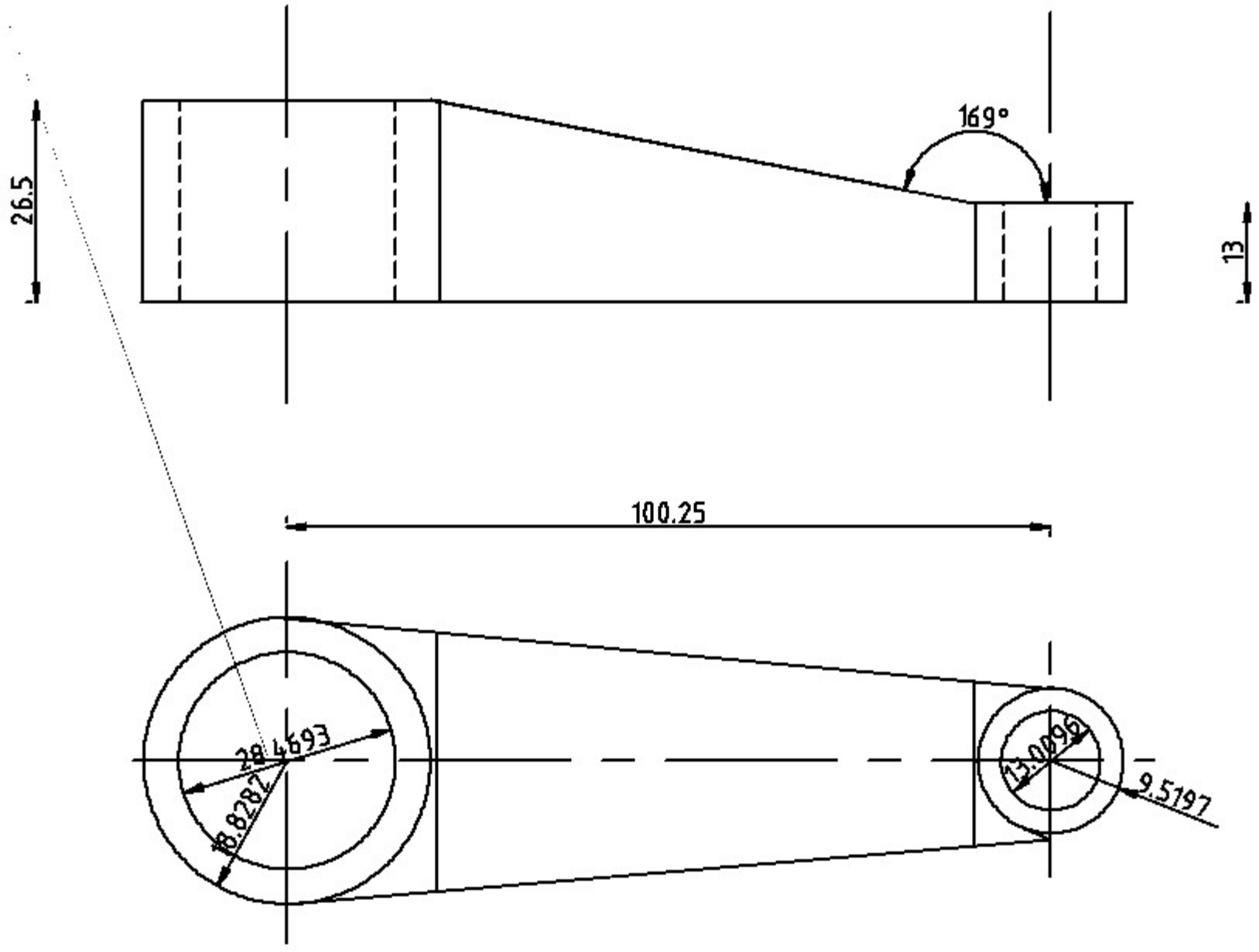
26.5
169°
13
100.25
28.4693
18.8287
13.0996
9.5197